PRODUCT SHEET

Description:
Panel Support Leg 128-180mm, F/10-13mm Panel, SS304, For Toilet Cubicles, W/2 M4 Screws

Item number:
22.23.146-1

Units	Box	Carton	HS Code	Barcode
Pcs.	10	50	8302419000	5704866521161

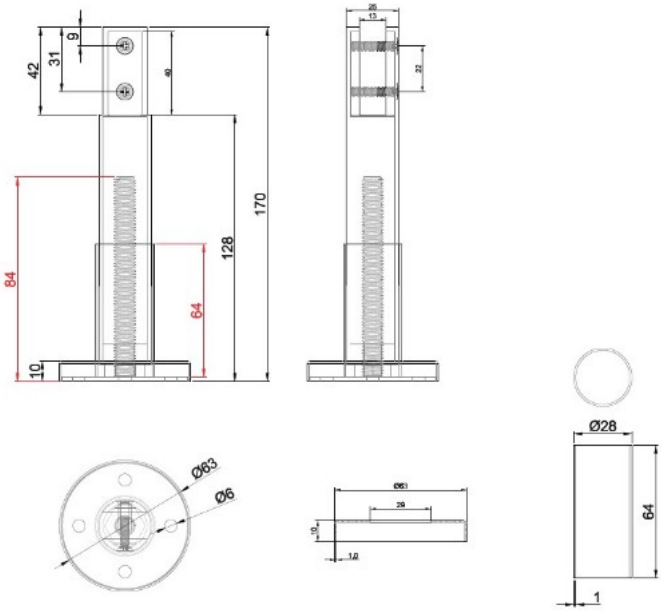

SISO A/S
Mileparken 11
DK-2740 Skovlunde
Denmark
VAT: DK24786013

Phone +45 45 830 900

www.siso.dk
siso@siso.dk

Danske Bank
Nytorv Branch
Copenhagen
SWIFT: DABADKKK

Account no.
4180 3112 112936
IBAN Account
DK7230003112112936